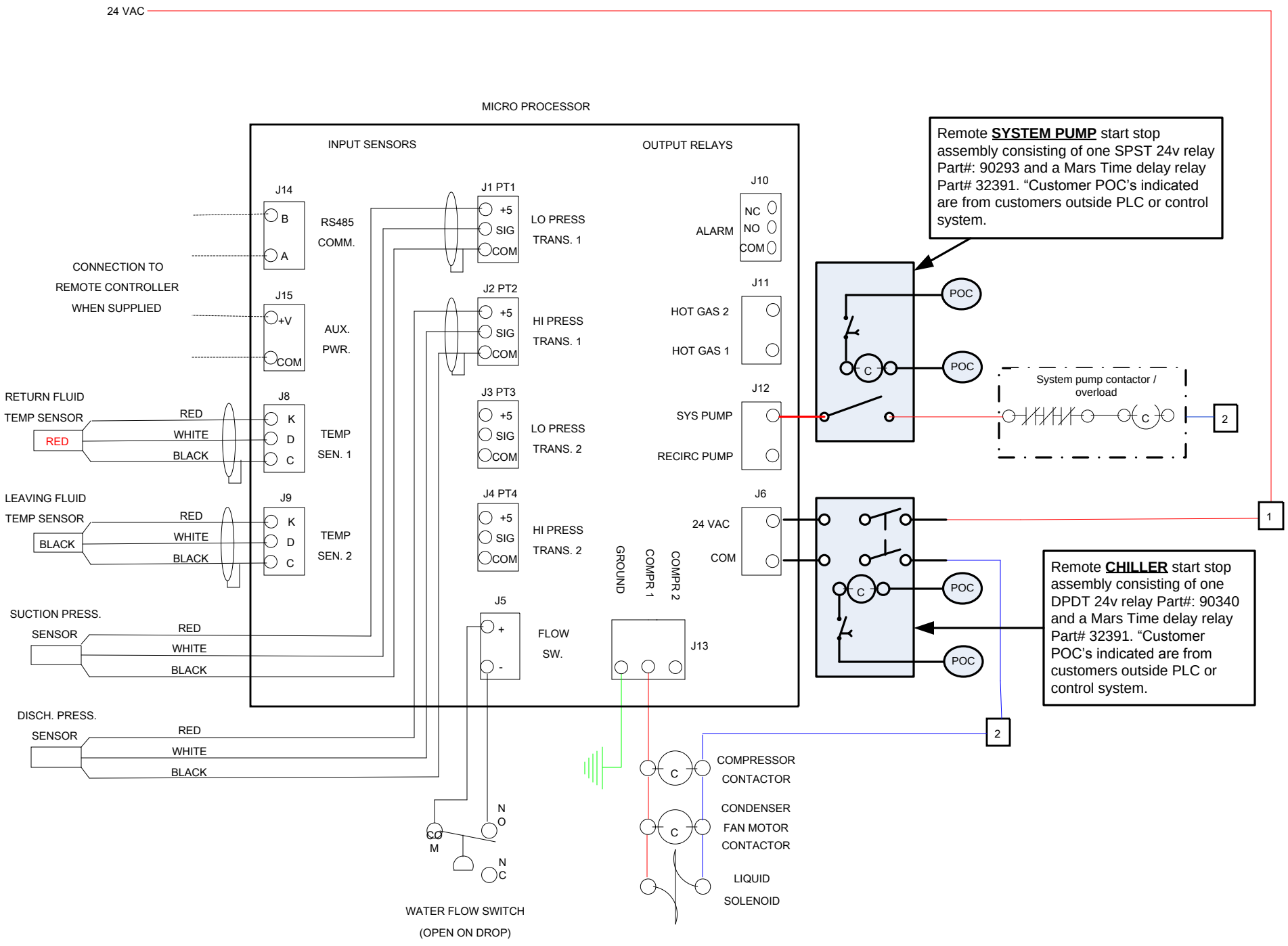
24 VAC
MICRO PROCESSOR
INPUT SENSORS
OUTPUT RELAYS
J14
B
A
RS485
COMM.
CONNECTION TO
REMOTE CONTROLLER
WHEN SUPPLIED
J15
+V
COM
AUX.
PWR.
J8
K
D
C
TEMP
SEN. 1
RETURN FLUID
TEMP SENSOR
RED
RED
WHITE
BLACK
J9
K
D
C
TEMP
SEN. 2
LEAVING FLUID
TEMP SENSOR
BLACK
RED
WHITE
BLACK
SUCTION PRESS.
SENSOR
RED
WHITE
BLACK
DISCH. PRESS.
SENSOR
RED
WHITE
BLACK
J1 PT1
+5
SIG
COM
LO PRESS
TRANS. 1
J2 PT2
+5
SIG
COM
HI PRESS
TRANS. 1
J3 PT3
+5
SIG
COM
LO PRESS
TRANS. 2
J4 PT4
+5
SIG
COM
HI PRESS
TRANS. 2
J5
+
-
FLOW
SW.
GROUND
COMPR 1
COMPR 2
J13
J10
NC
NO
COM
ALARM
J11
HOT GAS 2
HOT GAS 1
J12
SYS PUMP
RECIRC PUMP
J6
24 VAC
COM
Remote SYSTEM PUMP start stop assembly consisting of one SPST 24v relay Part#: 90293 and a Mars Time delay relay Part# 32391. "Customer POC's indicated are from customers outside PLC or control system.
POC
POC
C
System pump contactor / overload
C
2
1
POC
POC
C
Remote CHILLER start stop assembly consisting of one DPDT 24v relay Part#: 90340 and a Mars Time delay relay Part# 32391. "Customer POC's indicated are from customers outside PLC or control system.
2
C
COMPRESSOR
CONTACTOR
C
CONDENSER
FAN MOTOR
CONTACTOR
LIQUID
SOLENOID
NO
COM
NC
WATER FLOW SWITCH
(OPEN ON DROP)